DAISY WHEEL PRINTER

USE OF THE TRACTOR UNIT

USE OF THE TRACTOR UNIT (OPTION)

Attachment and Removal of the Tractor unit

STEP 1 : Remove the paper supporter and the acoustic cover.

STEP 2 : Lift up the top cover.

STEP 3 : Pull forward paper bail release lever.

STEP 4 : 1) Set tractor unit to engage A and B portions to arrow marked ← portions. And then, set the left portion of tractor as the same way.

2) Make sure that gear C is engaging with gear D .

3) When tractor unit is installed, paper bail and paper stopper (which is located under the platen.) will be released at same time.
Paper bail release lever may be positioned at either pulled or original position.

STEP 5 : Attach the acoustic cover (for the tractor unit).

STEP 6 : Attach the paper guide.

STEP 7 : Remove tractor unit by holding right and left hand side plates and depressing lock pawls E and lifting it.

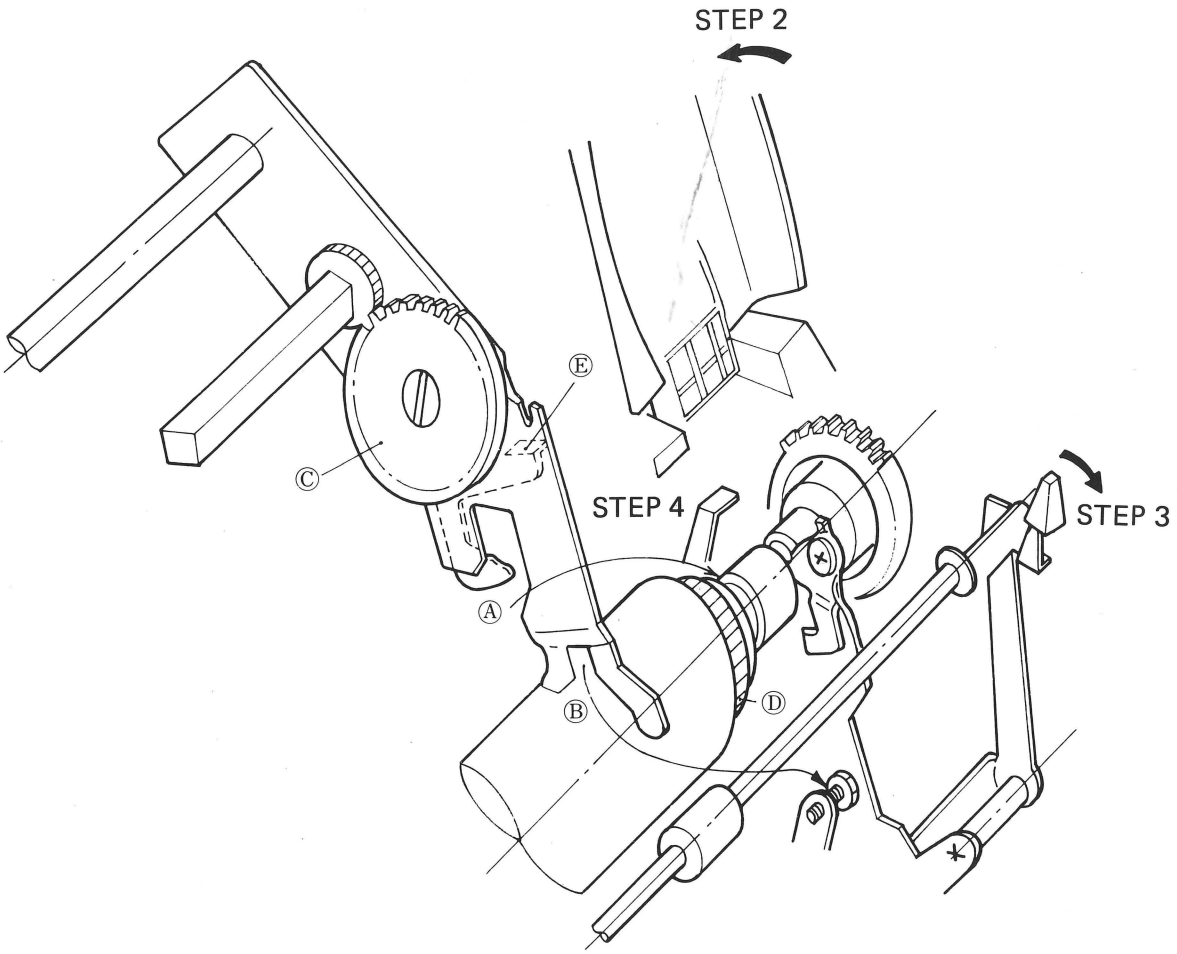

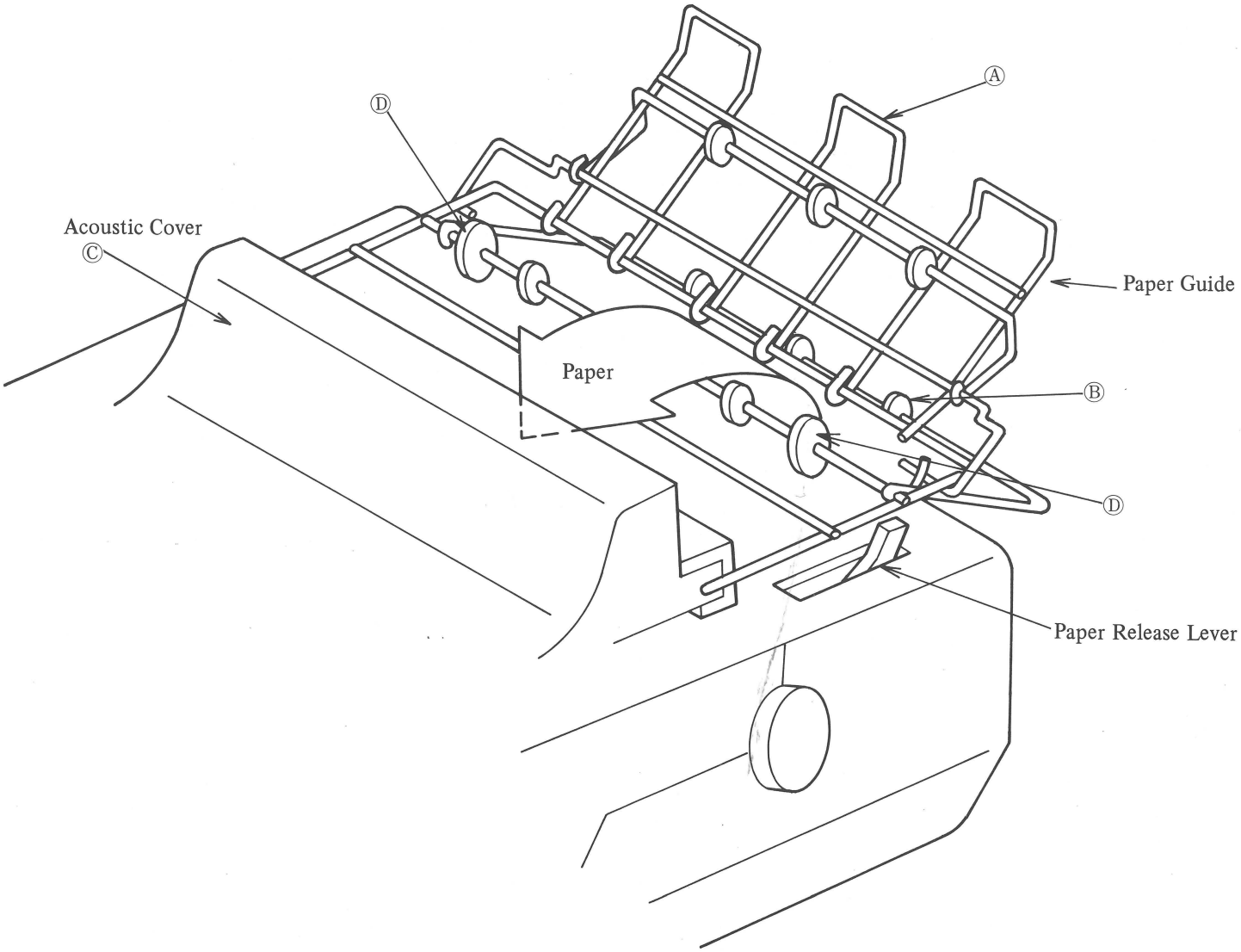

Fig. 1

Paper Loading

1. Turn the portion (A) of the paper guide rearward to place it in raised position. (Fig. 1)

2. Insert the paper under the rollers of the portion (B).
   The portion (B) will automatically bounce up when the portion (A) is raised. (Fig. 1)

3. Push the paper end all the way in to the bottom of the platen. (Fig. 2)
   In this case, keep the paper release lever pulled toward you.

4. Push the paper release lever rearward.

5. Replace the portion (A) in its original position and open the acoustic cover (C). (Fig. 3)

6. Operate the platen knob to advance the paper up to the tractor and set the paper in the tractor. (Fig. 3)

7. Close the cover (C) and pass the paper over portion (A). (Fig. 4)

8. Pull the paper release lever back forward.

9. Set the paper guide (D) to match the paper width. (Fig. 5)

10. Check to see that the alarm lamp is not ON.

11. Adjust the paper position by operating the platen in the feed direction. The red line of the paper meter will show the bottom of printed character.

12. Depress the SELECT switch to create SELECT state, and data will be accepted.

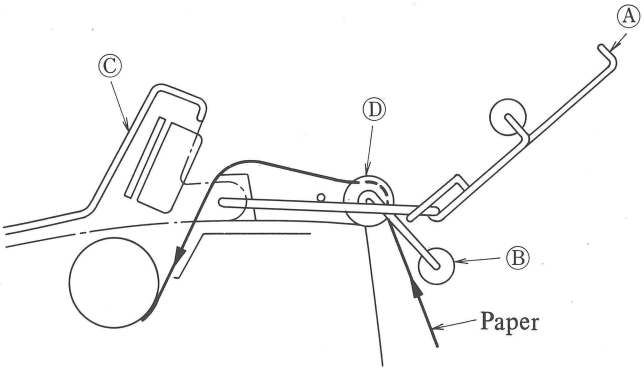

Fig. 2

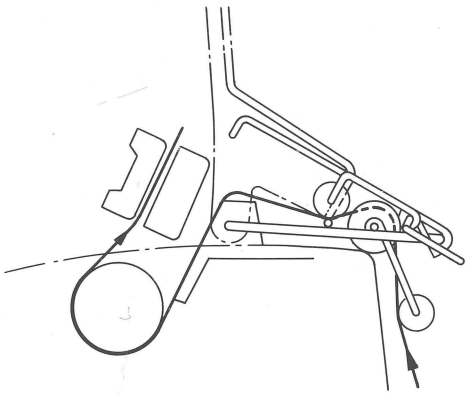

Fig. 3

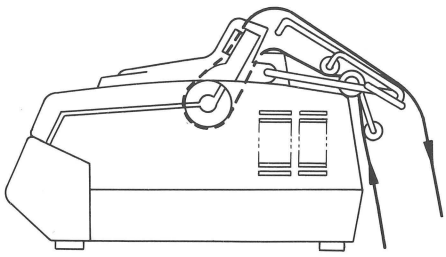

Fig. 4

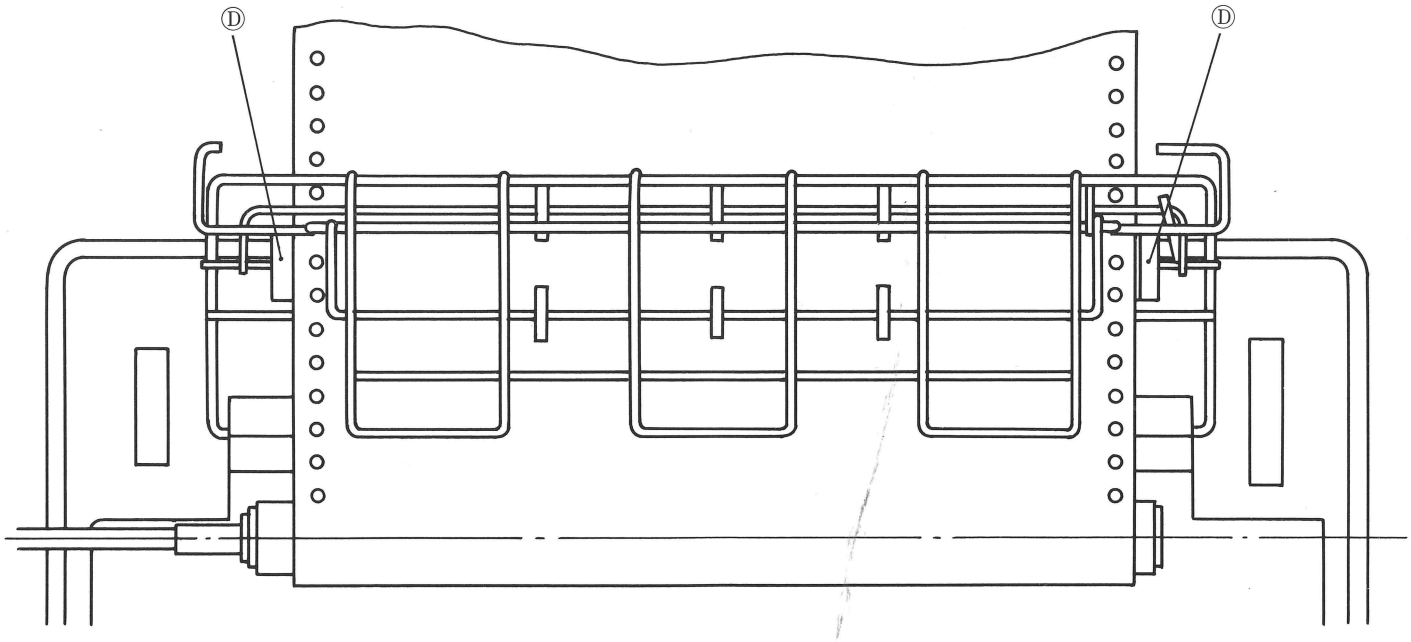

Fig. 5

Printed in Japan
594510087